TRELLEBORG SEALING SOLUTIONS

Mechanical Face Seals

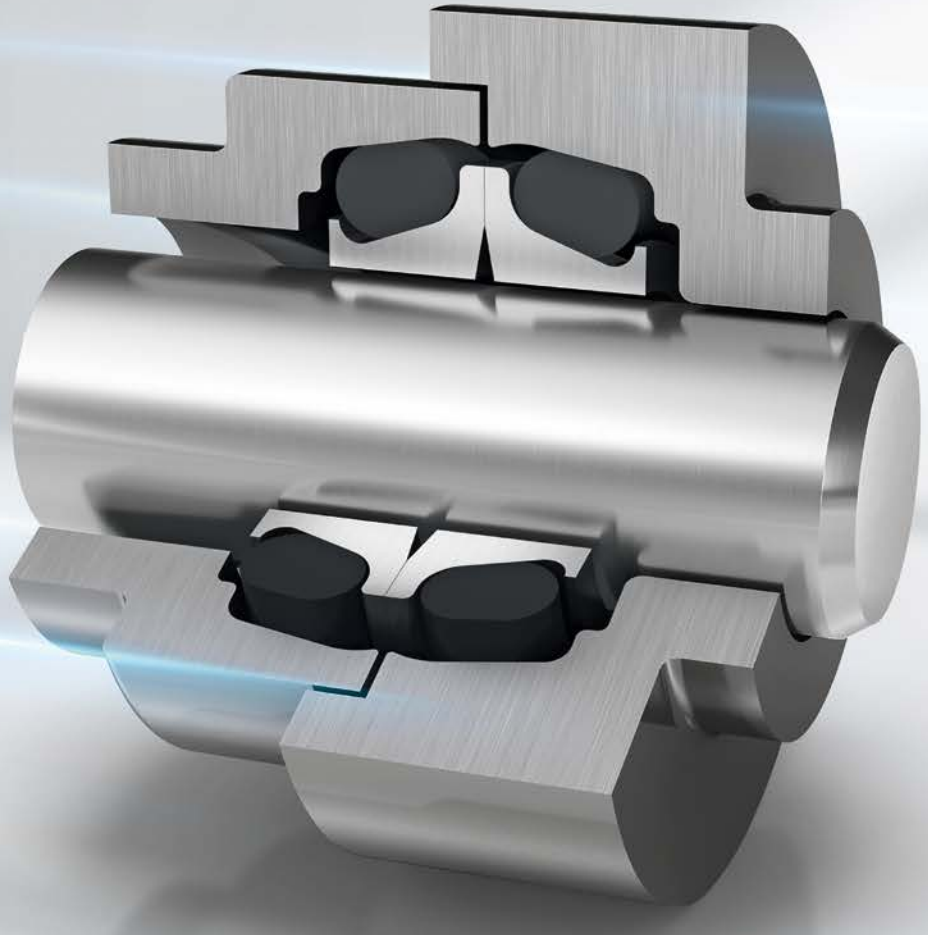

PROTECTING THE ESSENTIAL

Protecting the essential

Trelleborg Sealing Solutions is one of the world's leading developers, manufacturers and suppliers of precision seals, bearings and custom-molded polymer components.
We collaborate closely with customers to develop unique, innovative solutions to tomorrow's challenges. Utilizing our dedicated product design, material development and testing capabilities, we are a one-stop-shop providing the best in elastomer, silicone, thermoplastic, PTFE and composite technologies for applications in aerospace, automotive, general industrial and healthcare & medical industries.

With over 70 years of experience, we serve as long-term business partners to help our customers bring products to market faster. Through strategically positioned material and product laboratories, specializing in design and applications, Trelleborg Sealing Solutions engineers support customers with design, prototyping, production, testing, installation and quality assurance using state-of-the-art tools. Our ServicePLUS portfolio of value-added services is designed to help customers optimize their business across the entire value chain.

Trelleborg Sealing Solutions brings leading edge technology and an in-depth, experience-based understanding of applications to customers through a global, but local approach. An international network of over 100 facilities worldwide includes over 40 manufacturing sites, more than 60 Customer Solution Centers and 10 R&D centers. Developing and formulating materials in-house, our material database includes over 2,000 proprietary compounds. We fulfill challenging service requirements, supplying standard parts in volume or a single custom-manufactured component, through our integrated logistical support, which effectively delivers over 40,000 sealing products to customers worldwide.

Trelleborg Sealing Solutions facilities are certified according to current market-related quality standards. In addition to the established ISO 9001 standard, our facilities are certified to environmental, health and safety standards, as well as specific customer specifications. These certifications are in many cases prerequisites, allowing us to comply to all market segment requirements.

ISO 9001

The information in this catalog is intended for general reference only and not for specific applications. Application limits for pressure, temperature, speed and media are maximum values determined in laboratory conditions. In application, due to operating parameters, maximum values may not be achievable. Customers must satisfy themselves of a product and material's suitability for their individual applications. Any reliance on information is therefore at the user's own risk. In no event will Trelleborg Sealing Solutions be liable for any loss, damage, claim or expense directly or indirectly arising or resulting from the use of any information provided in this catalog. While every effort is made to ensure the accuracy of information contained herewith, Trelleborg Sealing Solutions cannot warrant the accuracy or completeness of information.

Contact your local Customer Solution Center to obtain the best recommendation for a specific application from Trelleborg Sealing Solutions.
This edition supersedes all previous catalogs. This catalog or any part of it may not be reproduced without permission.

® All trademarks are the property of Trelleborg Group. The turquoise color is a registered trademark of Trelleborg Group. © 2026, Trelleborg Group. All rights reserved.

Contents

4	Tools & Resources
10	General Description
12	Materials
13	Design Instructions
13	Storage Conditions
14	Installation Instructions
18	Installation Recommendations for Type DO in Bearing and Cast Iron Steel
24	Installation Recommendations for Type DF Bearing Steel

Online Tools & Resources to Support Design Engineers

Trelleborg Sealing Solutions offers a wide variety of online tools and services for engineering and industrial use. Find reference materials, interactive web tools and apps, learning resources and more, all designed to make specifying seals easier.

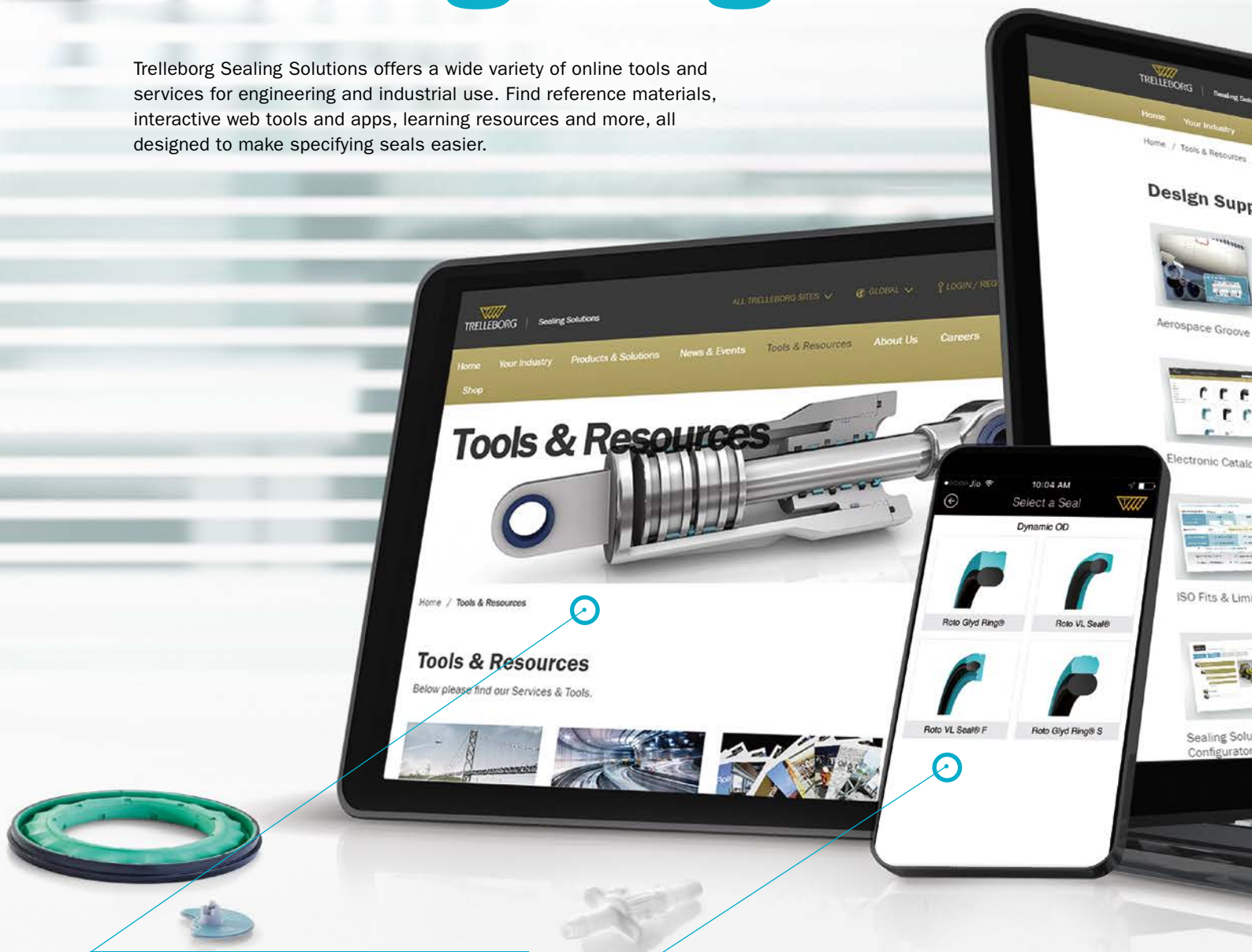

Technical Library

Our Technical Library offers you a collection of webinars, whitepapers and articles covering various topics in the world of seals and sealing technology.

Mobile Tools & Apps

Our range of innovative engineering apps include an Area and Volume Calculator; Unit and Hardness Converter; Mechanical Engineering Calculator; as well as specialist application selectors.

Discover the Electronic Catalog online as an app or on our website

Electronic Catalog

The Electronic Catalog is a user-friendly service that connects you to the broad range of products Trelleborg Sealing Solutions offers. The products are arranged based on product type and product group, making it easy to find the one you need.

Seals-Shop.com

Trelleborg's Seals-Shop is the online solution for fast and easy procurement of a wide range of high-performance seals, including Rod and Piston Seals, Scrapers, Radial Oil Seals and simple O-Rings.

CAD Service

Our CAD Service offers easy access to technical drawing downloads. Create 2D and 3D drawings quickly and easily, then choose how to receive the CAD files.

O-Ring Calculator

The online O-Ring Calculator provides a quick and easy way to calculate O-Ring dimensions and the appropriate housing layout in accordance with the international O-Ring standard ISO 3601.

Sealing Solutions Configurator

The configurator provides you with the most suitable solutions for your application. Just select the industry and application, enter the operating parameters and we will provide you with our recommended sealing solutions.

Discover our wide range of tools and apps at **www.trelleborg.com/seals/resources**

Mobile Tools & Apps

We understand the needs of engineers on the go. Check out our latest mobile tools and apps, ranging from an O-Ring calculator to unit and hardness converters. Just search for "Trelleborg" in the App Store or Google Play to find the tools to optimize your daily productivity.

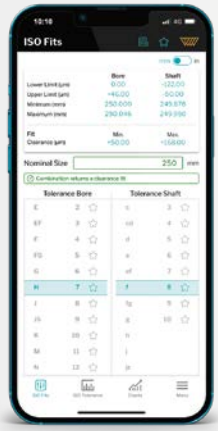

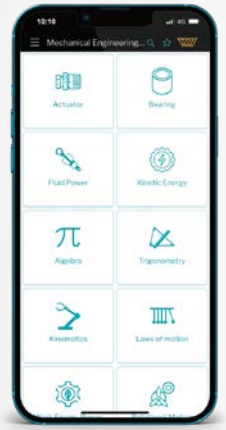

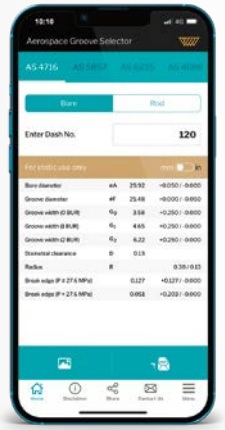

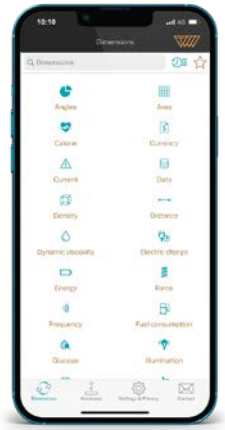

ISO Fits & Tolerances

Simply enter the nominal diameter and select the tolerance classes for bore and shaft to find the complete ISO fits definition. It contains all relevant values, including type of fit, with handy graphs to illustrate the classes by bore and shaft. The results of this application are based on DIN ISO 286.

Mechanical Engineering Calculator

A useful app containing over 250 formula calculators in 16 categories, with more being added with every update. Categories include the fields of mathematics, physics and mechanical engineering.

Aerospace Groove Selector

This app covers five of the most important SAE Aerospace groove standards for hydraulic systems, making it quick and easy to find the size of grooves and hardware needed. Includes dimensions for AS4716 Rev B, AS5857 Rev A, AS6235 Rev A, AS4088 Rev E and AS4832 Rev A.

Installation Instructions

Videos demonstrate the best practice methods for installing seals, providing all relevant documentation within the interface. It guides you to successful installation of Radial Oil Seals, Mechanical Face Seals and Turcon® and Zurcon® rod and piston seals.

Converter – Universal

By simply selecting the dimension and entering a value for conversion, the app offers a wide range of engineering and scientific units for each dimension. It also has other useful features like currency conversion, timezone conversion, percentage calculations, a running pace calculator and more.

Android App on
Google Play

MANY MORE APPS available

Available on the
APP STORE

Discover our wide range of mobile tools and apps at
www.trelleborg.com/seals

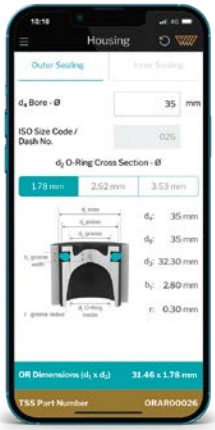

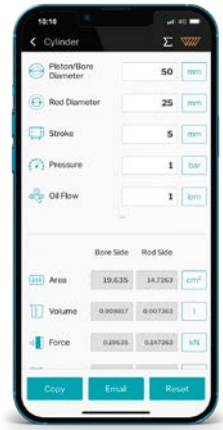

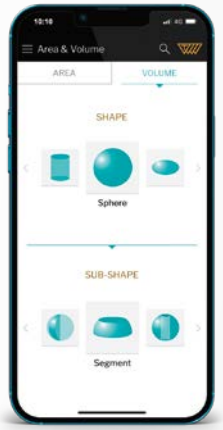

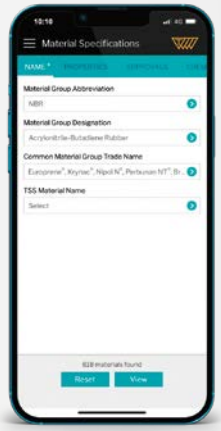

O-Ring Selector

When a user enters installation specifications into the O-Ring Selector app, such as the bore or rod/shaft diameter, the app quickly calculates O-Ring and housing dimensions in both metric and inch. Standards covered are ISO 3601-1, NFT 47-502, JIS B 2401 and SMS 1586.

Hydraulic System Calculator

The Hydraulic System Calculator helps you design a solution around the cylinder, which may involve motor, pump, orifice and pipe calculations. The application is in compliance with ISO 3320, ISO 3321 and ISO 4393.

Area and Volume Calculator

Speeds up and simplifies calculating the area and volume of more than 170 geometric shapes. The app supports both metric and inch, and conveniently displays the formulas used. Fill your shape with solids or liquids, choosing from 1500 different materials to calculate the weight.

Healthcare Materials

A quick and easy overview of the compatibility of 34 materials with 35 chemical environments that are commonly encountered in the healthcare and medical industries. Select up to 20 materials and environments at once to produce a chart that rates each material from 'excellent' to 'not recommended'.

Sealing Materials Selector

Enter material specifications and required parameters, such as application temperature or hardness, to receive instant material proposals. The app features filters to limit searches based on chemical compatibility, institute approvals and product type. Data sheets can be requested from within the interface.

Electronic Catalog

Discover the Electronic Catalog online as an app or on our website

The Electronic Catalog is a user-friendly service that connects you to the broad range of products Trelleborg Sealing Solutions offers. The products are arranged based on product type and product group, making it easy to find the exact one you need.

Many functions are also included within the Electronic Catalog that allow you to understand product capabilities, compare similar seals, request a quote and much more. The Electronic Catalog is available from the Trelleborg Sealing Solutions website and in the App Store and GooglePlay for mobile use.

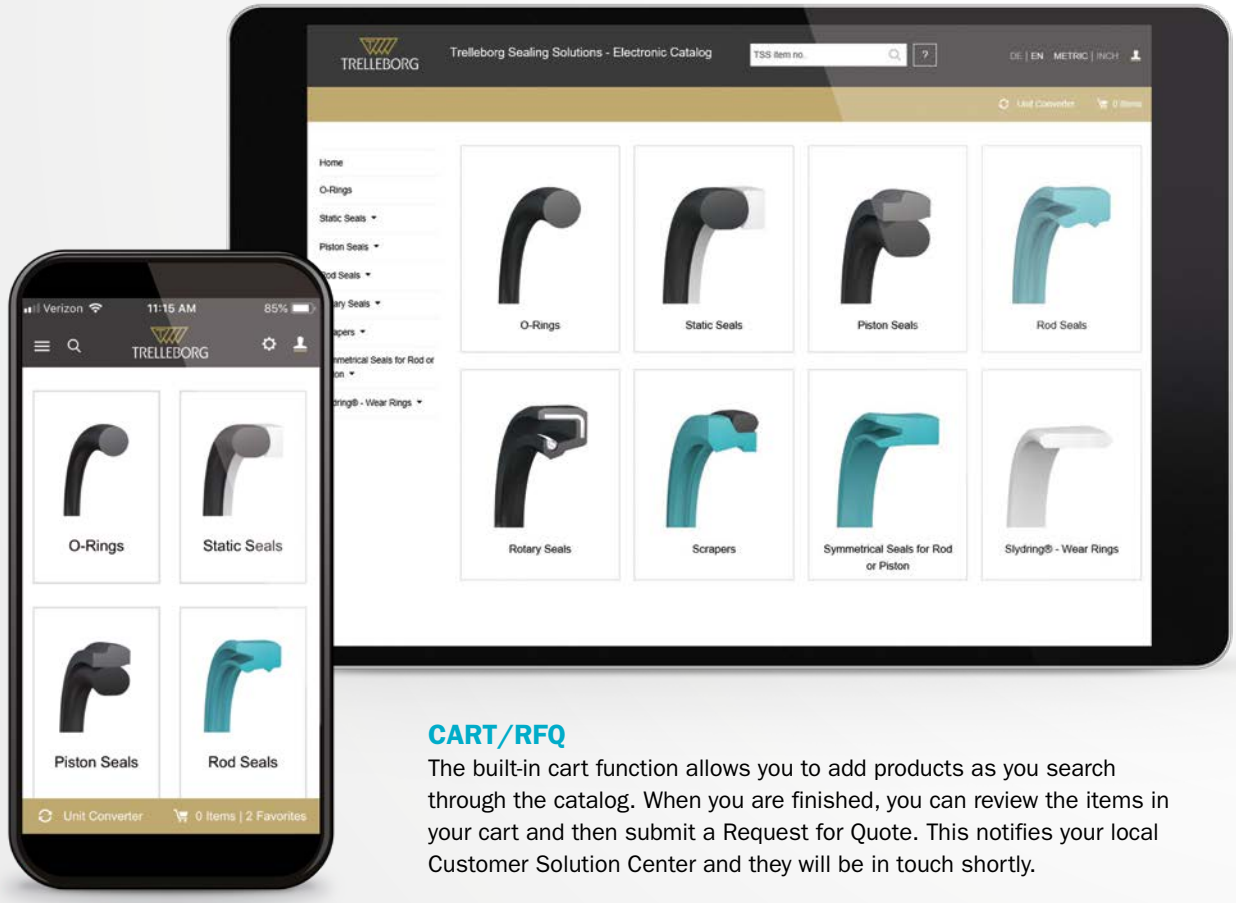

CART/RFQ

The built-in cart function allows you to add products as you search through the catalog. When you are finished, you can review the items in your cart and then submit a Request for Quote. This notifies your local Customer Solution Center and they will be in touch shortly.

FILTERING

If you have specific operating conditions that the seal must meet and/or installation dimensions, the Electronic Catalog offers a filtering function within the product groups. Here you can input your temperatures, pressure, speed and various installation dimensions to filter products that can meet your needs.

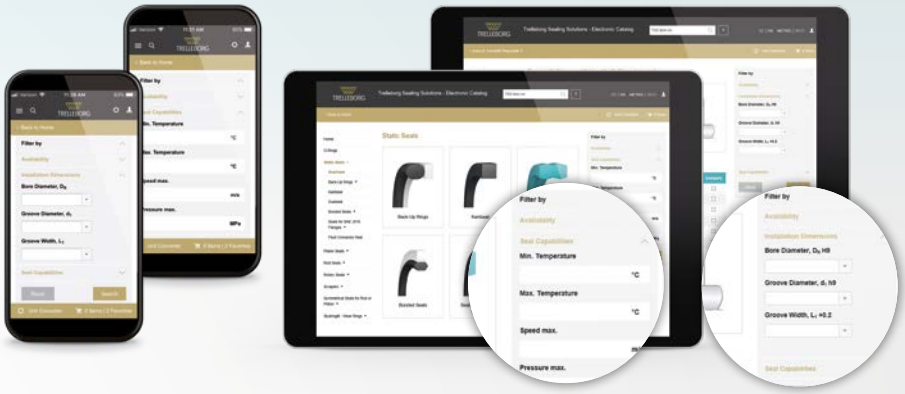

PRODUCT COMPARISON

When looking through the catalog, you can choose to compare multiple products. The product comparison function allows you to select which products you are interested in, and then puts all relevant information into a table for your review. You can even choose to display all product details side by side or to only show the fields where they differ.

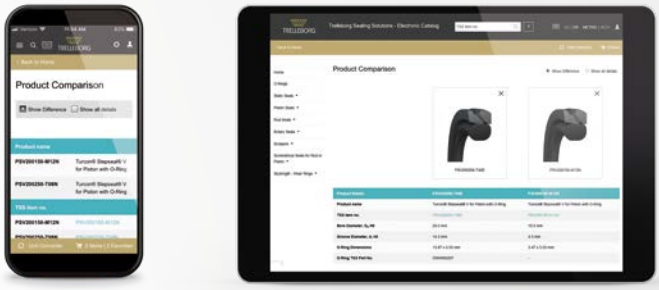

PRODUCT INFORMATION

Detailed product information is available for each part number. Once you select a specific part number, you will be able to see its installation dimensions, seal capabilities, related catalogs and other information. From this page, registered users can access the material data sheets that are applicable to the part number.

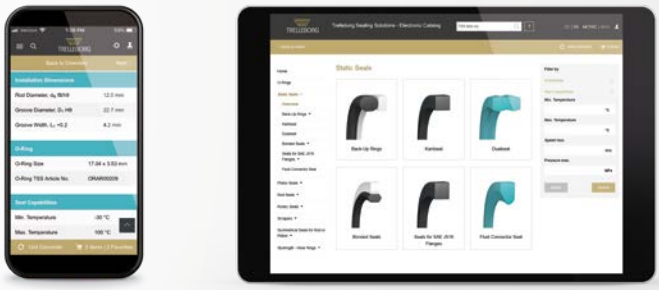

ADD TO FAVORITES

Do you have a part that you frequently look up or need information on? You can now save any of our part numbers as a favorite that is linked to your account. Anytime you log in to the Electronic Catalog, your favorites will be a click away!

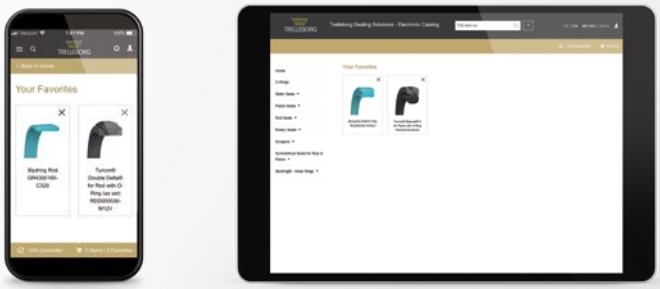

UNIT CONVERTER

If you are looking at a product and need to know the conversion between metric and imperial, you can use the Unit Converter tool that is available at the top of the screen for web users and at the bottom for mobile.

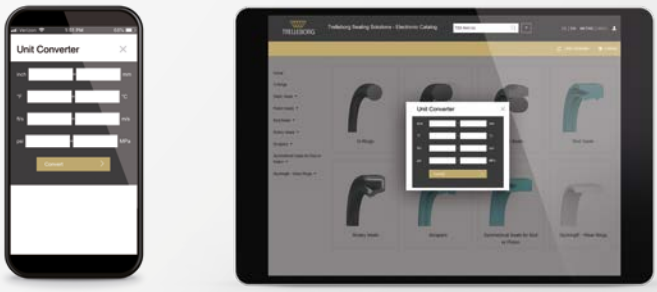

Mechanical Face Seals

General Description

Mechanical Face Seals are a special form of sealing solution for rotating mechanical components. They are also known under other designations, such as lifetime seals, floating seals and heavy-duty seals.

TYPES

There are two different types of Mechanical Face Seal. The most common form is Type DO, which is characterized by the use of an O-Ring as the secondary sealing element (see Figure 1).

Type DF, on the other hand, has an elastomer with a diamond-shaped cross-section-Ø as a secondary sealing element instead of the O-Ring (see Figure 2).

Both types consist of two identical metal seal rings which seal against each other on a lapped seal face.

Special designs, like that in Figure 3, are available on request. Seal types can also be divided by the use of different seal materials.

DESIGN FEATURES

The seals consist of two metallic seal rings. They are mounted in separate housings face-to-face. The elastomeric elements center the seal in the housing.

METHOD OF OPERATION

The elastomeric rings provide three different functions:

- They generate a uniform axial face load. Enough to avoid the opening of the seals but not too high to avoid lapped surface damage.
- Transmit the torque from rotating half (seat) through the lapped surfaces to the static half.
- They guarantee flexibility to the whole system against vibration and misalignment.
- Prevent the sliding of half group assembled inside its seat.

It is important to note that only one half of the seal rotates; the interface between the two precision lapped mating surfaces rotating against the other at an orthogonal angle to the shaft. They form a leak-proof seal. The seal has a wedge shaped gap from the ID to the seal face allowing for easy access to lubricate the seal face. Lubrication is necessary at all times. The lubricant builds a thin film between the sliding faces by a capillary effect and centrifugal force.

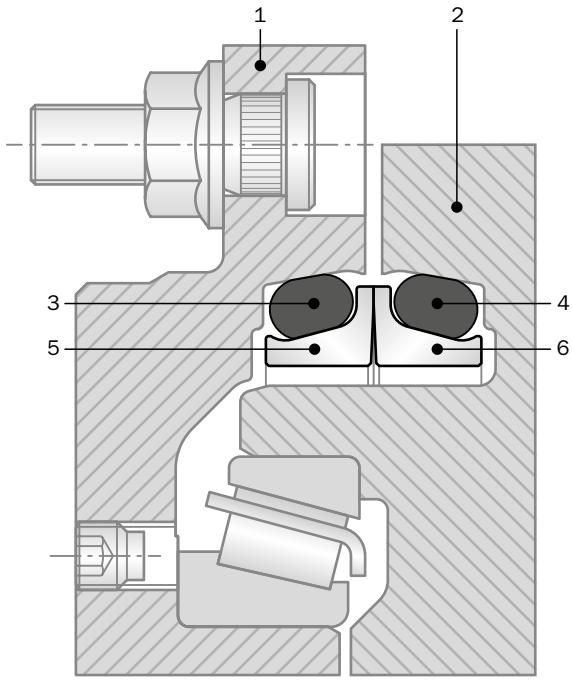

1= Seal Group Seat Rotating
2= Seal Group Seat Static
3= Seal Elastomeric Ring
4= Seal Elastomeric Ring
5= Seal Metal Ring Rotating
6= Seal Metal Ring Static

Figure 1: Mechanical Face Seals, Type DO

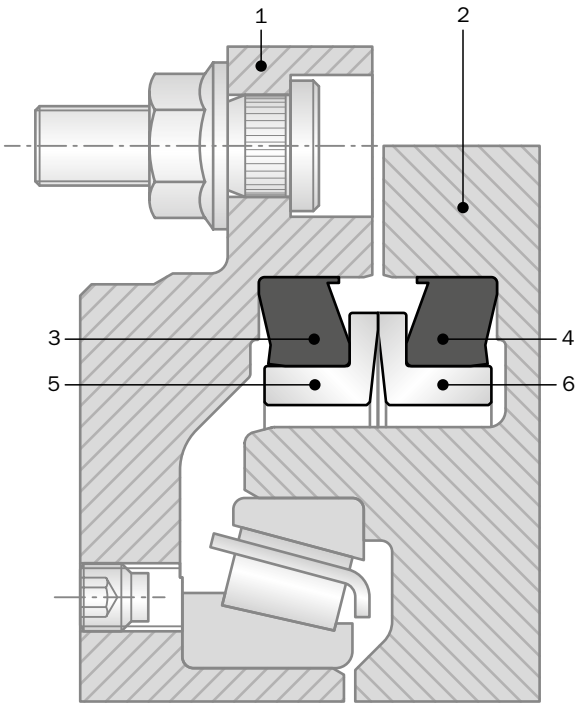

1= Seal Group Seat Rotating
2= Seal Group Seat Static
3= Seal Elastomeric Ring
4= Seal Elastomeric Ring
5= Seal Metal Ring Rotating
6= Seal Metal Ring Static

Figure 2: Mechanical Face Seals, Type DF

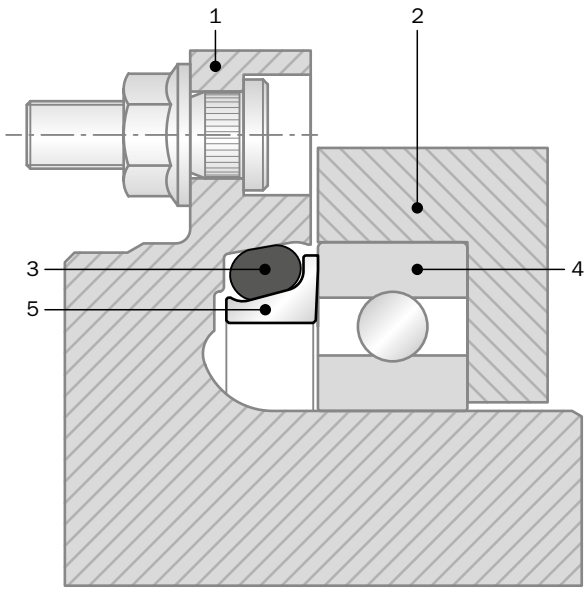

1= Seal Group Seat Rotating
2= Seat Static
3= Seal Elastomeric Ring
4= Seal Metal Ring Counterpart
5= Seal Metal Ring Rotating

Figure 3: Special Design

FEATURES AND BENEFITS

- Simple, reliable design
- High sealing effect against dirt, dust, water and abrasive media from the outside and against oil and grease from the inside
- Cost-effective
- Long service life
- Floating, useful against vibration or misalignment
- Maintenance-free
- Easy to assemble

APPLICATIONS

The Mechanical Face Seal functions to protect the shaft and inner parts against wear from the external environment. At the same time, the seal has to avoid any oil leakage from the inner to the external part.

Mechanical Face Seals are designed to work in heavily contaminated environments, where a combination of wear resistance and chemical compatibility, to prevent corrosion, are key.

These include:

Market segments as:
- Agriculture
- Mining
- Construction
- Industrial
- Military Equipment

Applications such as:
- Gearboxes
- Axles
- Undercarriages
- Tunnel Boring Machines
- Conveyor Systems
- Mixers
- Stirrers

and other applications with similar conditions or where maintenance-free lifetime sealing is expected.

OPERATING CONDITIONS

The seals should not be subjected simultaneously to maximum pressure and maximum speed.

Operating Pressure:
The shaft seal is pressure-free under normal operating conditions.

The Mechanical Face Seal can hold up to 0.15 MPa of differential pressure from outside to inside and from inside to outside. For higher differential pressures, please contact your local Customer Solution Center, which will analyze suitability for the application.

SPEED

Standard:
Cast Iron: 3 m/sec with oil lubrication
100Cr6: 1 m/sec with oil lubrication

Customized*:
Cast Iron: up to 6 m/sec with oil lubrication
(up to 1.5 m/sec with grease lubricant)
100Cr6: up to 2.5 m/sec with oil lubrication
(up to 1 m/sec with grease lubricant)

* For customized solutions with higher peripheral speeds, please contact your local Customer Solution Center to analyze suitability.

Whether you require a standard or a customized solution, we strongly recommend getting in touch with Trelleborg:

- Whenever you design a new application.
- When an existing application needs to be modified, due to changes in peripheral speed, temperature, pressure, lubrication, or dimension, for example.

RUN IN

It's strongly suggested during the first 10 hours of rotation to work with peripheral speeds not exceeding 1 m/sec.

TEMPERATURE

-50 °C to +200 °C (-58 °F to +392 °F), depending on the elastomeric ring material.

LUBRICATION, MEDIA

The lubrication serves two important functions, and it is needed in all cases. It reduces the friction between the seal face and the mating faces and acts as a cooling agent for the complete shaft and housing.

The best results with regard to wear and service life are achieved with oil lubrication. Grease lubrication is possible but needs special attention, mainly relating to peripheral speed. It's necessary to have a minimum oil level of 1/3 of the seal inside diameter and a full level for grease. Please contact your local Customer Solution Center in other cases or if environmentally compatible bio-oils have to be used.

■ Materials

METAL PARTS

Metal parts of Mechanical Face Seals are available in two different alloy compounds (See Table 1).

The hardness of the two different materials on the sliding contact area are:

- Bearing Steel (100Cr6) = 63 +/- 3 HRC
- Chromium based Alloy = 66 +/-3 HRC
- Nickel Based Alloy = 60 +/- 4 HRC

Contact your local Customer Solution Center to identify suitable material for your application.

Table 1: Alloy Composition

Material Chemical Composition %	Bearing Steel Material 100Cr6	Chromium Base Alloy Material	Nickel Base Alloy Material
C	0.95 - 1.10	3.4 - 3.8	2.3 - 3.8
Cr	1.4 - 1.6	15.00 - 19.00	1.2 - 1.7
Ni	-	-	3.5 - 4.3
Fe	Balance	Balance	Balance

The analysis range serves to take account of the cross-section. Deviations can be tolerated as far as the microstructure and the mechanical properties are not affected.

ELASTOMERIC RING

The elastomeric rings for Mechanical Face Seal are available in different compounds, as in Table 2.

Table 2: Elastomeric Ring Compound

Type	Temperature Range (min / max) °C		Hardness Available SH A: +/-5			Mechanical Resistance	Oil Suitability
NBR	-25	+100	50	to	70	Good	Good
NBR LT	-50	+100	60	to	70	Good	Good
HNBR	-30	+150	60	to	65	Very Good	Good
HNBR LT	-40	+150		65		Very Good	Good
FKM	-15	+200		65		Good	Good
VMQ	-50	+175		65		Quite Good	No EP

Compounds can cover the listed temperature and hardness ranges. Please contact your local Customer Solution Center for more information and to analyze the best elastomeric ring compound suitable for use with the final application.

Design Instructions

SEAL HOUSING

The installation dimensions of the seal housing are shown in Table 2.

The axial gap (S) in the housing is such that it meets the demands of the construction machinery industry.

For higher peripheral speeds, please contact your local Customer Solution Center.

It's necessary to avoid any burrs or cutting edges in the seats.

For the surface of the seal installation chamber, we recommend a machining quality of:

3.0 µm < Ra < 6.0 µm
12.5 µm < Rz < 25 µm

SHAFT

The Mechanical Face Seal does not contact the shaft. For this reason, no particular demands have to be met on the hardness or surface finish.

To ensure correct operation, a minimum gap must be maintained between the shaft and the inside diameter. This gap serves to supply the seal with lubricant.

Storage Conditions

The parts have to be stored according to several conditions:

- The single carton box and the inner packaging has to be intact without any opening until assembly.

Parts must be:

- Stored in a dry environment with temperature between 0 °C and +30 °C
- Stocked far from sources of heat
- Kept away from contact with light sources.

If the above conditions are respected, the Mechanical Face Seal are protected for approximately 1 year from the shipping date.

Installation Instructions

To receive detailed and up-to-date video guides and documentation related to assembly and installation, scan the QR code with a mobile device or visit www.trelleborg.com/seals/mfs

The short description of assembly procedure both for DO type and DF type follows.

PREPARATION FOR INSTALLATION

Mechanical Face Seals must be handled carefully, avoiding damage to the lapped surfaces. The installation area must be kept free from dust and dirt.

The installation should be carried out in the following steps.

PREPARATION BEFORE INSTALLATION

- Only remove the seal from its packing just before installation.
- Do not stand the seal on the lapped surface.
- The housing must be free of notches or burrs on installation radii and free from any residues of previous working operations e.g. dirt, grease, metal chips, etc.

INSTALLATION INSTRUCTIONS FOR TYPE DO

- Make sure that the O-Ring is not twisted. A twisted O-Ring may cause a looped effect.
- Check if the O-Ring is properly placed back on the seal. The O-Ring must be seated in the outer radius inside the retaining lip.
- Clean the half seal groups in a volatile solvent or industrial denaturated alcohol and wait for it to evaporate, being sure that no oil film remains on the parts.
- Assemble each half seal into the house using an installation tool (Figure 4). Use a uniform load over the tool to push the half group in to the house until the elastomeric ring reaches the related housing border. The Installation Tool has to only touch the O-Ring and not the metal ring and importantly not the lapped surface. If you have any doubts or require assistance, please contact your local Customer Solution Center.
- When the tool touches the house all around the circumference, the installation phase is complete.
- Remove the tool and visually check the position of the O-Ring and seal. Make sure that everything is seated symmetrically.

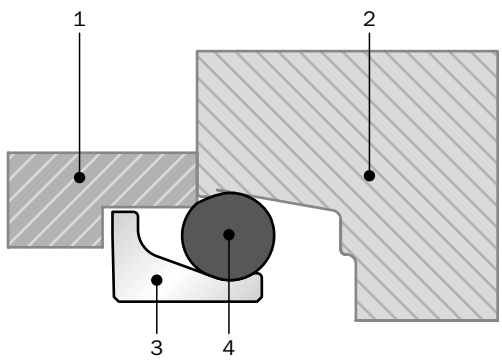

1= Installation Tool
2= Seat
3= Metal Ring
4= Elastomeric Ring

Figure 4: Installation Tool for DO Type

The following picture shows the correct installation of each half seal into the housing:

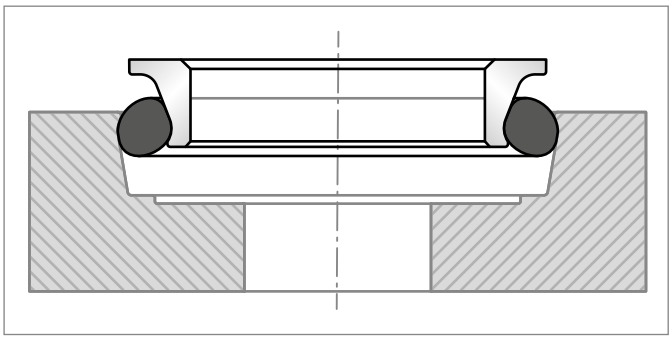

Figure 5: Correct installation of seal

The following pictures show incorrect installation:

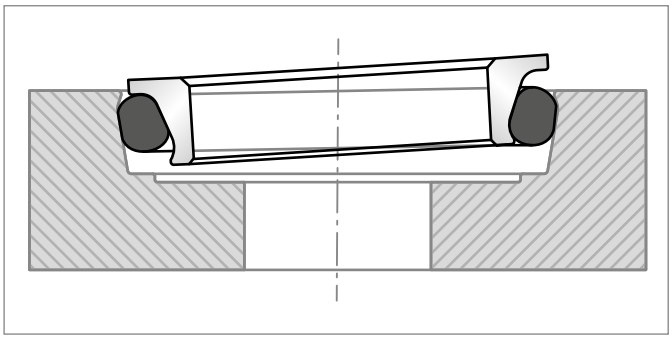

Figure 6: Metal ring slipped against the O-Ring

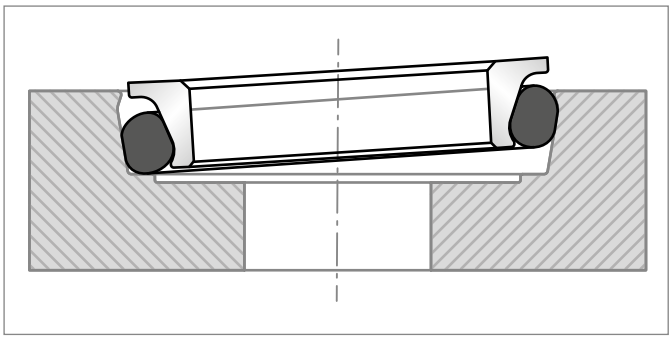

Figure 7: O-Ring slipped against the seat

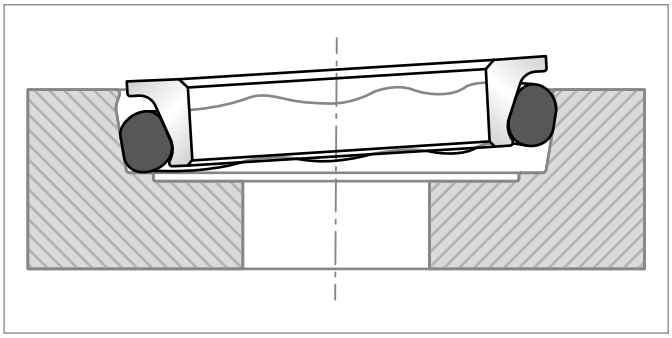

Figure 8: O-Ring slipped against the seat and waved against the metal ring

- Clean both lapped surfaces with a small amount of denatured alcohol and wait for it to evaporate. Apply a thin film of clean oil to the faces.
- Tilt the two parts together, bringing the slide faces carefully into contact.
- Adjust the gap (S) with a slow assembly speed (for example, 2 mm/sec).
- Fill the housing with oil, and bleed if necessary.

The following picture shows correct assembly:

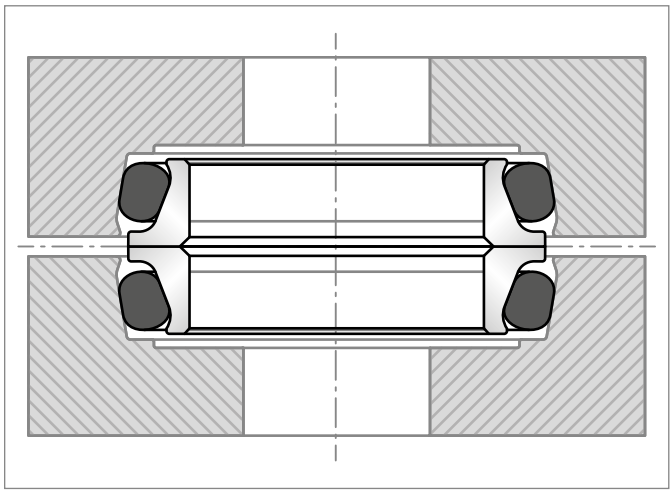

Figure 9: Correct seal assembly

The following pictures show incorrect assemblies:

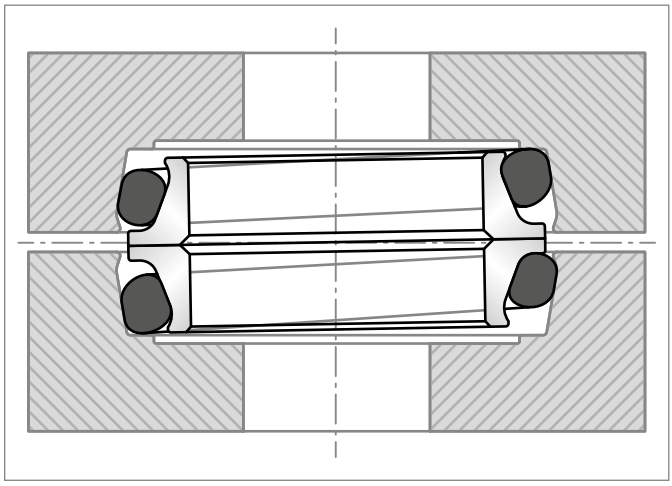

Figure 10: O-Rings slipped against seats and Mechanical Face Seal group is tilted

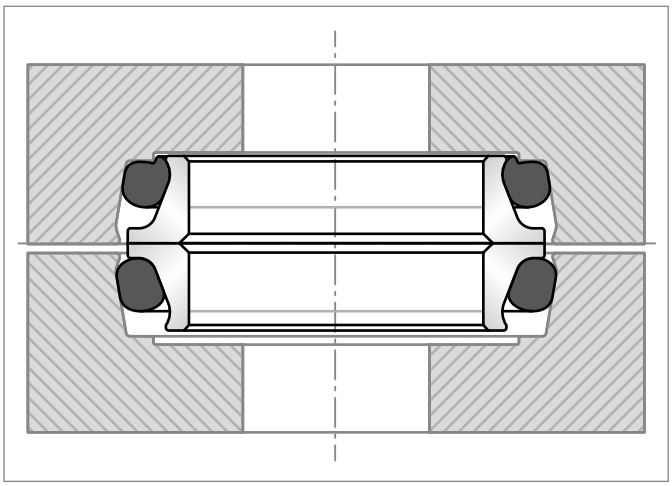

Figure 11: Upper half of the Mechanical Face Seal group has O-Ring slipped against the seat and on the seat bottom

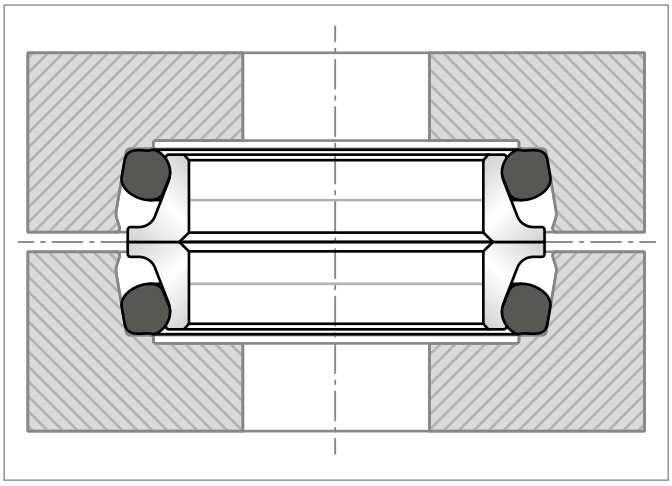

Figure 12: Both halves of the Mechanical Face Seal group have O-Rings slipped against the seat and on the seat bottom

In the event that the installation tool cannot be withdrawn or where the seal is of a special design, an installation O-Ring can be used. The installation O-Ring is placed between the O-Ring of the seal and rear of the ramp on the seal ring. Using an installation tool, apply force to the inner diameter of the metal rings. The installation O-Ring keeps the Mechanical Face Seal elastomeric ring in the correct position. After installation the O-Ring is easily removed (see Figure 13).

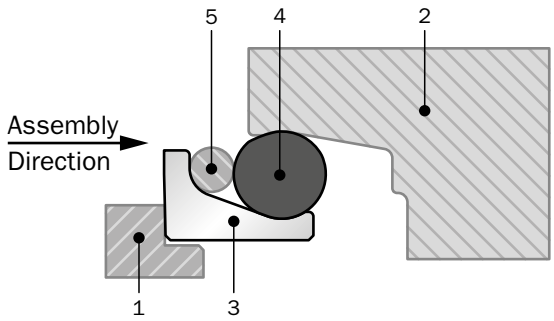

1= Installation Tool
2= Seat
3= Metal Ring
4= Elastomeric Ring
5= Installation O-Ring

Figure 13: O-Ring as installation aid

INSTALLATION INSTRUCTIONS FOR TYPE DF

- Make sure that the Diamond-Shaped Elastomeric Ring is well assembled on the metal ring.
- Clean the half seal groups in volatile solvent or industrial denaturated alcohol and wait for it to evaporate, being sure that no oil film remains on the parts.
- Assemble each half on the seal into the house using an installation tool (Figure 14). Use a uniform load over the tool to push the half group in to the housing until the elastomeric ring reaches the house bottom. The installation tool has to only touch the inner part of the metal ring close to the Inner Diameter and far from the lapped surfaces. If you have any doubts or suggestions, please contact your local Customer Solution Center.
- Remove the tool and make a visual check of the position of the seal. Make sure that everything is seated symmetrically.
- Clean both lapped surfaces with a small quantity of denatured alcohol and wait for it to evaporate. Then apply a thin film of clean oil to the faces.
- Tilt the two parts together, bringing the slide faces carefully into contact.
- Adjust the gap (S) with a slow assembly speed (e.g. 2 mm/sec).

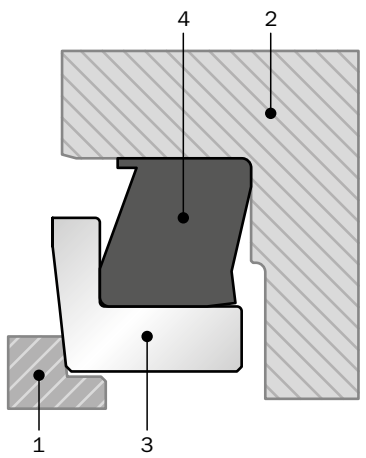

1= Installation Tool
2= Seat
3= Metal Ring
4= Elastomeric Ring

Figure 14: Installation Tool for DF Type

Installation Recommendations for Type DO in Bearing and Cast Iron Steel

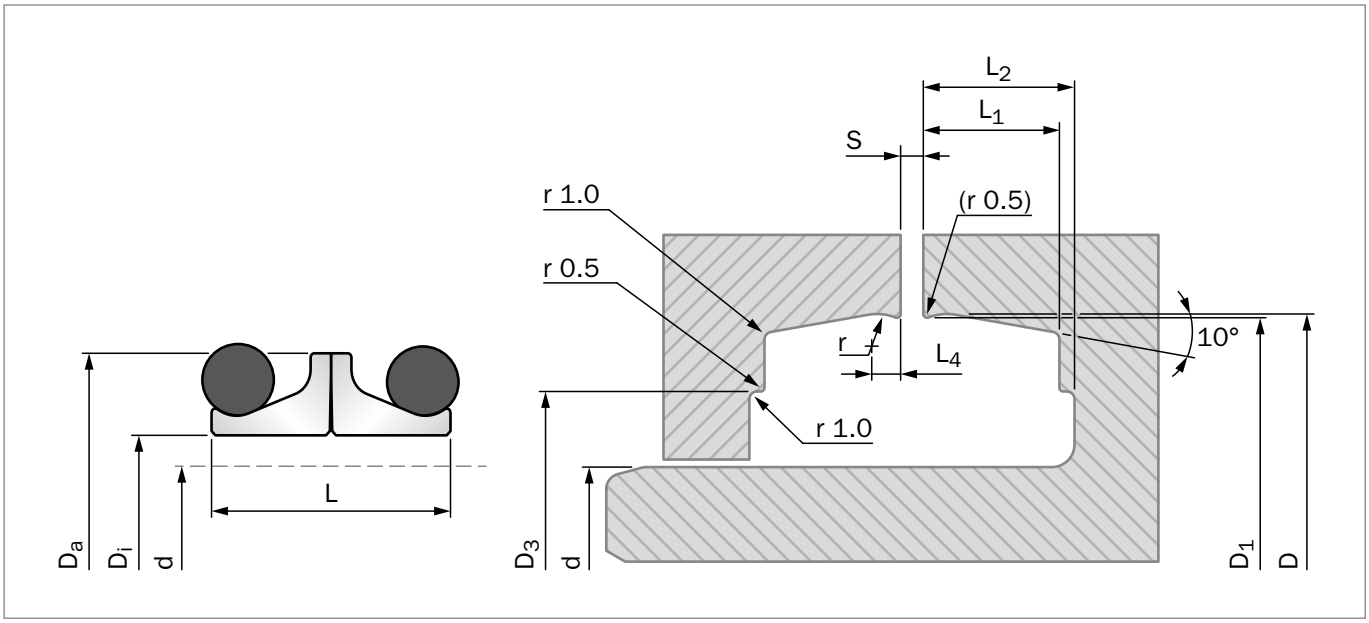

Figure 15: Installation Drawing

Table 3: Standard Installation Dimensions / TSS Part Number

TSS Part No.	D_i	D_a	L	$d_{max.}$	D	D_1	D_3	L_1	$L_{2min.}$	L_4	r	S	BS	CI
TLDOA0340	34.00	45.00	14.00	30.00	47.00	46.50	42.00	6.50	8.00	1.00	1.00	1.50	●	
TLDOC0380	38.00	51.00	20.40	35.00	53.70	53.00	46.00	9.00	11.00	1.80	2.00	3.00	●	
TLDOA0380	38.00	51.00	20.00	35.00	53.70	53.00	46.00	9.00	11.00	1.60	2.00	3.00		●
TLDOA0390	39.00	50.00	14.00	35.00	52.00	51.50	46.00	6.50	8.00	1.00	1.00	1.50	●	
TLDOA0400 1)	40.00	52.00	20.00	36.00	55.00	54.20	46.00	9.00	11.00	1.00	1.00	3.00	●	
TLDOA0430	43.00	58.00	24.00	39.00	61.60	60.80	53.40	10.00	12.00	1.80	2.50	3.00	●	
TLDOA0430	43.00	58.00	24.00	40.00	62.00	61.30	51.00	10.50	12.50	2.00	2.00	3.00		●
TLDOB0450	45.00	58.00	21.60	41.00	61.60	61.00	54.00	10.50	12.50	1.80	2.50	3.00	●	
TLDOA0450	45.00	58.00	21.00	42.00	61.60	60.80	53.40	10.00	12.00	1.80	2.50	3.00		●
TLDOA0460 2)	46.00	59.00	20.00	42.00	61.60	61.20	53.00	9.00	11.00	2.00	2.50	3.00	●	
TLDOB0480	48.00	58.00	14.40	44.00	59.90	59.40	55.00	6.30	8.00	1.50	1.70	1.50	●	
TLDOC0480	48.00	62.00	26.00	45.00	68.00	67.20	58.00	12.00	14.00	2.00	3.00	3.00	●	
TLDOA0480	48.00	62.00	25.00	45.00	68.00	67.20	58.00	12.00	14.00	2.00	3.00	3.00		●
TLDOA0555	55.50	70.00	22.00	52.00	73.80	73.10	65.50	10.00	11.50	2.40	5.00	3.00	●	
TLDOA0555	55.50	70.00	22.00	52.50	73.80	73.10	55.50	10.00	11.50	2.40	5.00	3.00		●
TLDOB0560	56.00	70.00	26.00	53.00	76.00	75.20	66.00	12.00	14.00	2.00	2.50	3.00	●	
TLDOA0560	56.00	70.00	25.00	53.00	76.00	75.20	66.00	12.00	14.00	2.00	3.00	3.00		●
TLDOA0570	57.00	77.50	35.60	54.00	81.40	80.70	68.50	15.20	20.90	3.50	4.80	3.00	●	
TLDOC0580	58.00	74.00	27.00	55.00	79.40	78.60	67.00	13.50	15.50	2.00	3.00	3.00		●
TLDOB0580 3)	58.00	75.00	27.00	53.00	79.20	78.60	66.00	12.00	14.00	2.00	2.50	3.00	●	
TLDOA0600 2)	60.00	74.00	20.60	57.00	78.40	77.40	70.00	9.00	11.00	1.90	2.50	3.00	●	
TLDOA0600 2)	60.00	74.00	20.60	57.00	78.40	77.40	70.00	9.00	11.00	1.90	2.50	3.00		●

Seat Ramp Angle is 10°, except for a few exceptions shown in the notes at the bottom of the page.
1) 15° 2) 12° 3) 12°30' 4) 9°30'
All sizes in Bearing Steel (BS) could also be requested in Cast Iron (CI)

TSS Part No.	D_i	D_a	L	$d_{max.}$	D	D_1	D_3	L_1	$L_{2min.}$	L_4	r	S	BS	CI
TLDOB0610	61.00	73.00	17.60	58.00	75.80	75.50	66.80	6.50	7.50	1.00	1.40	3.00	●	
TLDOA0610	61.00	73.00	17.60	58.00	75.80	75.50	68.50	8.00	9.50	1.40	1.50	2.00		●
TLDOB0635	63.50	82.50	31.80	60.50	86.50	85.70	73.50	15.20	16.80	3.50	4.80	3.20	●	
TLDOA0635	63.50	82.50	31.80	60.50	86.80	85.90	74.00	15.00	17.00	3.00	2.50	3.00		●
TLDOA0640 2)	64.00	78.00	25.00	61.00	84.60	83.80	74.00	12.50	14.50	2.00	3.00	3.00	●	
TLDOA0640	64.00	78.00	25.00	61.00	84.60	83.60	74.00	12.50	14.50	2.00	3.00	3.00		●
TLDOA0660	66.00	85.00	28.00	63.00	90.00	89.20	78.00	14.00	16.00	2.00	3.00	3.00		●
TLDOA0675	67.50	86.50	31.80	64.00	91.00	90.00	78.00	14.50	17.00	2.80	5.00	3.00	●	
TLDOB0690	69.00	89.00	24.00	66.00	92.50	91.50	83.00	11.00	13.50	2.80	5.00	3.00	●	
TLDOA0690 2)	69.00	84.00	24.00	66.00	89.60	88.60	78.50	11.00	13.00	1.90	3.00	3.00	●	
TLDOA0690 2)	69.00	84.00	24.00	66.00	89.60	88.60	78.50	11.00	13.00	1.90	3.00	3.00		●
TLDOA0700	70.00	84.00	20.00	66.00	87.00	86.20	80.00	9.10	11.00	2.00	1.00	3.00	●	
TLDOB0700 2)	70.00	90.00	29.00	65.00	95.50	94.70	84.00	13.50	15.50	2.00	3.00	3.00	●	
TLDOB0710	71.00	84.00	20.00	68.00	87.40	86.70	80.80	8.50	10.00	1.80	2.00	3.00	●	
TLDOA0710 2)	71.00	90.00	29.00	68.00	95.50	94.70	84.00	13.50	15.50	2.00	3.00	3.00		●
TLDOA0725	72.50	92.00	35.60	70.10	96.00	95.20	83.00	15.20	20.90	3.50	4.80	3.00	●	
TLDOA0731	73.10	92.00	31.80	70.10	96.00	95.20	83.00	15.20	16.80	3.50	4.80	3.20	●	
TLDOB0730	73.00	92.00	31.80	70.00	96.20	95.40	84.00	15.00	17.00	3.00	4.00	3.00	●	
TLDOA0730	73.00	92.00	31.80	70.00	96.20	95.40	84.00	15.00	17.00	3.00	2.50	3.00		●
TLDOA0735	73.50	88.50	20.40	70.00	90.20	89.40	82.00	12.70	14.30	2.20	2.80	3.20	●	
TLDOB0740	74.00	86.50	22.50	70.00	91.40	90.70	80.00	9.50	11.50	2.00	3.00	3.00	●	
TLDOA0740	74.00	86.60	22.00	71.00	91.40	90.70	80.00	9.50	11.50	2.00	3.00	3.00		●
TLDOA0750	75.00	94.00	29.00	73.00	101.40	100.60	89.00	14.50	16.50	2.00	3.00	3.00	●	
TLDOA0775 1)	77.50	87.60	13.60	75.90	90.70	90.20	85.20	7.50	8.00	1.40	1.50	3.00	●	
TLDOA0795	79.50	92.50	20.00	76.00	96.00	95.30	88.00	8.50	10.50	1.80	2.00	3.00	●	
TLDOB0800	80.00	100.00	30.00	76.00	104.10	103.30	93.00	15.00	18.00	2.30	2.50	3.00	●	
TLDOA0800	80.50	99.50	29.00	77.00	105.00	104.20	92.00	14.50	16.50	2.00	3.00	3.00		●
TLDOA0810	81.00	98.00	28.00	78.00	102.30	101.30	91.00	12.50	14.50	2.80	5.00	3.00	●	
TLDOA0810	81.00	98.00	28.00	78.00	102.30	101.30	91.00	12.50	14.50	2.80	5.00	3.00		●
TLDOA0820	82.00	98.00	22.00	79.00	102.30	101.30	91.00	9.00	11.00	2.80	5.00	3.00		●
TLDOA0825	82.50	102.00	35.60	80.50	107.30	106.50	94.30	15.20	20.90	3.50	4.80	3.20	●	
TLDOA0860	86.00	99.00	20.00	81.00	102.00	101.20	94.00	9.00	11.50	2.00	3.00	3.00	●	
TLDOC0900 2)	90.00	109.00	32.00	86.00	112.50	111.70	104.00	14.50	17.00	3.20	3.00	3.00	●	
TLDOA0904	90.40	109.50	31.80	87.40	113.40	112.70	100.40	15.20	16.80	3.50	4.80	3.20	●	
TLDOC0900	90.50	109.00	32.00	87.00	112.50	111.70	104.00	14.50	17.00	3.20	3.00	3.00		●
TLDOB0900	90.00	104.60	26.00	87.40	107.30	106.70	100.40	11.80	14.20	2.90	2.80	3.20	●	
TLDOB0904	90.40	109.50	35.60	88.50	113.40	112.70	100.40	15.20	20.90	3.50	4.80	3.20	●	
TLDOA0920	92.00	109.00	22.00	89.00	113.80	113.40	105.00	9.50	11.50	1.80	2.50	3.00		●
TLDOB0920	92.00	109.50	22.00	88.00	113.80	113.00	105.00	9.50	11.50	2.00	3.00	3.00	●	
TLDOB0940	94.00	106.50	23.00	90.00	111.60	110.80	102.00	9.50	11.50	2.00	3.00	3.00	●	
TLDOA0940	94.00	106.50	22.00	91.00	111.60	110.80	102.00	9.50	11.50	2.00	2.50	3.00		●
TLDOC0950 2)	95.00	114.00	32.00	91.00	120.00	119.20	107.00	15.00	17.00	2.50	3.00	3.00	●	
TLDOA0950	95.00	111.00	24.00	92.00	115.60	114.80	108.00	11.00	12.50	1.80	2.00	3.00	●	

Seat Ramp Angle is 10°, except for a few exceptions shown in the notes at the bottom of the page.
1) 15° 2) 12° 3) 12°30' 4) 9°30'
All sizes in Bearing Steel (BS) could also be requested in Cast Iron (CI)

TSS Part No.	D_i	D_a	L	$d_{max.}$	D	D_1	D_3	L_1	$L_{2min.}$	L_4	r	S	BS	CI
TLDOB0950	95.00	114.00	31.00	92.00	120.00	119.20	107.00	15.00	17.00	2.50	3.00	3.00		●
TLDOA0965 1)	96.50	106.80	13.60	94.90	109.70	109.20	105.00	7.50	8.00	1.40	1.50	3.00	●	
TLDOA1000	100.00	119.00	31.60	97.00	123.00	122.20	110.00	15.20	16.80	3.50	4.80	3.20	●	
TLDOA1000	100.00	119.00	31.80	97.00	123.20	122.40	111.00	14.50	16.50	2.50	2.50	3.00		●
TLDOB1000	100.00	120.00	29.40	97.00	125.00	124.20	111.00	14.00	16.00	2.90	3.00	3.00		●
TLDOA1015	101.50	119.00	29.00	95.00	125.30	124.30	112.30	13.80	16.60	2.50	3.00	3.00	●	
TLDOA1020 2)	102.00	122.00	32.00	99.00	127.20	126.20	115.00	15.50	17.50	2.50	3.00	3.00		●
TLDOA1030 2)	103.00	122.00	32.00	99.00	127.20	126.20	115.00	15.50	17.50	2.50	3.00	3.00	●	
TLDOC1040	104.00	121.00	22.00	101.00	125.50	125.10	117.50	9.50	11.50	2.00	3.00	3.00		●
TLDOE1040	104.00	122.50	22.50	100.00	125.50	125.10	117.50	9.50	11.50	2.00	3.00	3.00	●	
TLDOD1040	104.00	117.00	22.00	100.00	121.00	120.20	110.00	9.50	11.50	2.00	3.00	3.00	●	
TLDOF1040	104.00	125.00	28.00	100.00	128.50	127.50	117.00	12.50	14.00	2.80	5.00	3.00	●	
TLDOA1070	107.00	125.00	24.00	103.00	130.40	129.40	119.50	11.00	13.50	2.80	5.00	3.00	●	
TLDOB1100 2)	109.00	127.00	32.00	106.00	133.00	132.00	121.00	15.00	17.00	2.50	3.00	3.00		●
TLDOA1090	112.00	132.00	32.00	104.00	136.50	135.50	124.00	15.50	17.50	2.50	3.00	3.00	●	
TLDOA1090	109.00	132.00	32.00	106.00	136.60	135.60	124.00	15.50	17.50	2.50	3.00	3.00		●
TLDOB1100	110.00	128.00	32.00	106.00	133.00	132.00	121.00	14.50	17.00	2.50	3.00	3.00	●	
TLDOB1110 2)	111.00	128.00	22.00	108.00	132.50	132.00	123.00	10.60	12.30	2.80	3.00	3.00	●	
TLDOA1145	114.50	129.00	23.50	107.50	134.10	133.10	126.00	10.40	11.90	2.80	5.00	3.00	●	
TLDOA1150	115.00	137.00	31.00	110.00	141.80	140.80	130.00	14.50	16.50	2.50	3.00	3.00	●	
TLDOA1150	115.00	137.00	31.00	112.00	141.80	140.80	130.00	14.50	16.50	2.50	3.00	3.00		●
TLDOB1170	117.00	140.00	28.00	113.00	142.50	141.50	132.00	12.50	14.00	2.80	5.00	3.00	●	
TLDOA1170	117.00	138.00	31.80	114.00	142.50	141.50	132.00	14.50	17.00	2.80	5.00	3.00	●	
TLDOA1190	119.00	140.00	28.00	115.00	142.50	141.50	132.00	12.50	14.00	2.80	5.00	3.00	●	
TLDOC1200	120.00	141.00	31.80	116.00	144.00	143.00	138.00	14.50	17.50	2.80	5.00	3.00	●	
TLDOD1200	120.00	142.00	38.00	116.00	149.00	148.00	133.00	17.00	19.00	2.50	3.00	4.00	●	
TLDOA1200	120.00	139.00	31.80	116.00	143.00	142.00	129.30	14.30	17.40	3.00	5.40	3.00	●	
TLDOA1240 4)	124.00	141.00	22.00	120.00	146.40	145.30	136.00	10.60	12.30	2.80	3.00	3.00	●	
TLDOA1240	124.00	141.00	22.00	121.00	145.80	145.00	136.00	9.50	11.50	2.00	3.00	3.00		●
TLDOB1250	125.00	144.10	31.80	120.00	148.50	147.50	136.00	14.30	17.40	3.00	5.00	3.00	●	
TLDOA1260	126.00	146.00	31.80	123.00	150.00	149.20	137.00	15.20	16.80	3.50	4.80	3.20	●	
TLDOA1265	126.50	139.00	26.80	123.50	143.80	143.10	136.90	11.80	14.20	2.90	2.80	3.20	●	
TLDOA1270	127.00	146.00	31.80	124.00	150.00	149.20	138.00	15.20	16.80	3.50	4.80	3.20	●	
TLDOA1270	127.00	146.00	31.80	123.00	150.20	149.40	138.00	14.00	16.00	2.50	2.50	4.00		●
TLDOD1270	127.00	141.20	25.40	124.00	143.80	143.10	136.90	11.80	14.20	2.90	2.80	3.20	●	
TLDOC1270	127.00	141.00	29.00	124.00	144.00	143.00	136.00	12.00	14.50	2.30	3.00	3.00	●	
TLDOD1300	130.00	152.00	38.50	125.00	159.00	158.00	144.00	18.50	20.50	2.50	3.00	3.00	●	
TLDOB1300	130.00	150.50	32.00	125.00	155.60	154.60	144.00	14.50	16.50	2.50	5.00	3.00	●	
TLDOD1300	130.00	152.00	38.00	127.00	159.00	158.00	144.00	18.50	20.50	2.50	3.00	3.00		●
TLDOA1427	142.70	156.90	25.40	139.70	159.70	158.90	152.10	11.80	14.20	2.90	2.80	3.20	●	
TLDOC1430	143.00	157.00	25.00	140.00	159.70	158.90	152.00	11.50	13.50	2.50	2.80	4.00		●
TLDOB1430	143.00	160.00	27.00	138.00	164.00	163.00	154.00	12.00	14.50	2.80	5.00	4.00	●	
TLDOA1440	144.00	157.50	26.00	139.00	160.00	159.00	154.50	12.00	14.50	2.80	5.00	3.00	●	

Seat Ramp Angle is 10°, except for a few exceptions shown in the notes at the bottom of the page.
1) 15° 2) 12° 3) 12°30' 4) 9°30'
All sizes in Bearing Steel (BS) could also be requested in Cast Iron (CI)

TSS Part No.	D_i	D_a	L	$d_{max.}$	D	D_1	D_3	L_1	$L_{2min.}$	L_4	r	S	BS	CI
TLDOC1460	146.00	175.00	38.00	142.00	180.50	179.50	162.00	17.70	20.50	3.00	6.30	6.30	●	
TLDOB1460	146.00	168.00	38.00	143.00	176.80	175.90	159.00	18.00	20.50	3.00	6.50	4.00	●	
TLDOA1460	146.00	168.00	38.00	143.00	177.00	176.00	159.00	18.00	20.00	2.50	3.00	4.00		●
TLDOA1463	146.30	171.70	38.00	142.30	176.80	175.90	158.90	18.40	20.30	3.70	6.30	6.30	●	
TLDOA1470	147.00	167.00	28.00	142.00	171.00	170.00	160.00	13.00	15.50	2.80	5.00	3.00	●	
TLDOA1480	148.00	170.00	31.00	142.00	175.60	174.60	164.00	15.00	17.00	2.50	3.00	4.00	●	
TLDOC1500	150.00	172.00	40.00	147.00	179.00	178.00	165.00	18.00	20.00	2.50	2.00	4.00	●	
TLDOC1500	150.00	172.00	40.00	147.00	179.00	178.00	165.00	18.00	20.00	2.50	3.00	4.00		●
TLDOA1530	153.00	171.50	28.00	149.00	176.30	175.30	164.50	12.50	14.50	2.80	5.00	3.00	●	
TLDOA1539	153.90	168.10	25.40	150.90	171.00	170.20	164.00	11.80	14.20	2.90	2.80	3.20	●	
TLDOB1530	154.00	168.00	25.00	151.00	171.00	170.20	164.00	11.50	13.50	2.50	2.80	4.00		●
TLDOA1540	154.00	168.10	27.00	151.00	171.00	170.00	162.50	12.00	14.50	2.30	3.00	3.00	●	
TLDOF1540	154.00	168.10	27.00	151.00	171.00	170.00	162.50	12.00	14.50	2.30	3.00	3.00	●	
TLDOC1540	154.00	173.50	31.80	151.00	178.00	177.00	166.00	14.50	17.00	2.80	5.00	3.00	●	
TLDOD1540	154.00	169.00	22.00	151.10	174.50	173.50	166.00	9.20	11.00	2.30	3.00	3.00	●	
TLDOE1540	154.00	170.00	21.00	151.00	175.10	174.10	167.00	9.20	10.00	2.30	3.00	3.00	●	
TLDOB1633	163.30	191.30	46.00	160.30	196.80	195.90	178.90	18.40	24.10	3.70	6.30	6.30	●	
TLDOB1630	163.00	191.00	38.00	160.00	196.40	195.50	179.00	18.00	20.00	3.10	6.40	4.00		●
TLDOA1633	163.30	191.20	38.00	160.30	196.80	195.90	178.90	18.40	20.30	3.70	6.30	6.30	●	
TLDOA1640	164.00	189.00	30.00	160.00	193.50	192.50	179.00	14.50	17.00	2.80	5.00	3.00	●	
TLDOA1650	165.00	181.00	27.00	161.00	185.00	184.00	176.50	12.00	14.50	2.70	4.00	3.00	●	
TLDOA1725	172.50	190.00	25.40	168.00	192.70	191.80	188.00	12.70	14.30	2.30	2.80	3.20	●	
TLDOA1740	174.00	190.00	25.40	170.00	192.70	191.80	188.00	12.70	14.30	2.30	2.80	3.20	●	
TLDOA1770	177.00	200.00	31.00	173.00	204.50	203.40	191.00	14.50	17.00	3.10	5.00	3.00	●	
TLDOA1780	178.00	199.00	32.00	175.00	203.60	202.40	190.00	14.50	16.00	3.00	5.00	3.00	●	
TLDOC1780	178.00	199.00	32.00	175.00	203.60	202.40	190.00	14.50	16.00	3.00	5.00	3.00	●	
TLDOB1780	178.00	200.00	38.00	175.00	210.60	209.60	192.00	19.00	21.00	3.00	4.00	4.00	●	
TLDOA1800	180.00	197.40	21.40	177.00	202.20	201.90	196.00	9.40	10.60	1.20	3.00	3.00	●	
TLDOA1823	182.30	210.30	38.00	179.30	215.40	214.40	197.50	18.40	20.30	3.70	6.30	6.30	●	
TLDOA1824	182.40	210.30	46.00	179.40	215.40	214.40	197.50	18.40	24.10	3.70	6.30	6.30	●	
TLDOB1830	183.00	202.00	28.00	179.00	206.00	205.00	195.00	12.50	14.50	2.80	5.00	3.00	●	
TLDOA1860	186.00	203.00	25.40	182.00	205.70	204.90	190.50	14.50	16.00	2.30	2.80	3.20	●	
TLDOD1910	191.00	210.00	28.00	187.00	214.00	213.00	203.00	12.50	14.50	2.80	5.00	3.00	●	
TLDOA1910	191.00	210.00	28.00	187.00	214.00	213.00	203.00	12.50	14.50	2.80	5.00	3.00	●	
TLDOA1910	191.00	210.00	28.00	187.00	214.00	213.00	203.00	12.50	14.50	2.80	5.00	3.00		●
TLDOA1920	192.00	215.00	33.00	189.00	220.80	219.80	207.00	16.50	18.50	3.00	4.00	4.00	●	
TLDOA1920	192.00	215.00	33.00	189.00	220.80	219.80	207.00	16.50	18.50	3.00	4.00	4.00		●
TLDOA1950	195.00	216.50	32.00	191.00	221.00	220.00	207.00	14.50	17.00	2.80	5.00	3.00	●	
TLDOA2000	200.00	228.50	38.00	196.00	233.50	232.50	215.50	18.00	20.50	3.00	6.30	6.30	●	
TLDOA2020	202.00	222.30	26.50	197.00	224.90	224.10	217.90	11.80	14.20	2.90	2.80	3.00	●	
TLDOA2050	205.00	227.00	30.00	201.00	231.50	230.50	219.00	14.50	17.00	2.80	5.00	3.00	●	
TLDOB2050	205.00	227.00	31.60	201.00	231.50	230.50	219.00	14.50	17.00	2.80	5.00	3.00	●	
TLDOA2087	208.70	222.80	26.00	205.00	225.40	224.40	217.00	11.50	13.50	2.20	2.50	3.00	●	

Seat Ramp Angle is 10°, except for a few exceptions shown in the notes at the bottom of the page.

1) 15° 2) 12° 3) 12°30' 4) 9°30'

All sizes in Bearing Steel (BS) could also be requested in Cast Iron (CI)

TSS Part No.	D_i	D_a	L	$d_{max.}$	D	D_1	D_3	L_1	$L_{2min.}$	L_4	r	S	BS	CI
TLDOA2090	209.00	234.00	42.00	206.00	242.60	241.60	224.00	19.50	22.50	3.00	4.00	4.00	●	
TLDOA2090	209.00	234.00	42.00	206.00	242.60	241.80	224.00	19.50	21.50	3.00	4.00	4.25		●
TLDOA2200	220.00	239.50	31.80	215.00	244.00	243.00	232.00	14.50	16.50	2.80	5.00	3.00	●	
TLDOA2200	220.00	239.00	31.80	217.00	244.00	243.00	232.00	14.50	16.50	2.80	5.00	3.00		●
TLDOC2200	220.00	239.50	31.80	215.00	244.00	243.00	232.00	14.50	16.50	2.80	5.00	3.00	●	
TLDOB2200	220.00	241.40	25.00	215.00	244.70	244.00	232.00	11.00	13.50	2.20	4.00	3.00	●	
TLDOA2235	223.50	251.40	38.00	220.50	256.50	255.70	238.70	18.40	20.30	3.70	6.30	6.30	●	
TLDOC2235	223.50	251.50	46.00	220.50	256.60	255.70	238.70	18.40	24.10	3.70	6.30	6.30	●	
TLDOA2240	223.50	252.00	38.00	220.00	256.60	255.70	238.00	18.00	20.00	3.10	6.40	3.00		●
TLDOA2250	225.00	252.00	38.00	221.00	258.00	257.00	241.00	19.00	21.00	3.00	4.00	4.00	●	
TLDOA2316	231.60	259.60	38.00	227.00	264.70	263.80	247.00	18.40	20.50	3.70	6.30	6.30	●	
TLDOA2350	235.00	259.60	38.00	231.00	264.70	263.80	247.00	18.40	20.50	3.70	6.30	6.30	●	
TLDOA2380	238.00	261.00	32.00	234.00	265.50	264.50	254.00	14.50	17.00	2.80	5.00	3.00	●	
TLDOA2390	239.00	268.00	40.00	235.00	274.20	273.20	257.00	20.50	22.50	3.00	4.00	4.00	●	
TLDOC2400	240.00	262.80	38.00	236.00	273.50	272.50	255.50	18.00	20.50	3.10	6.50	3.00	●	
TLDOA2400	240.00	262.80	38.00	237.00	273.50	272.50	257.00	19.00	21.00	3.00	4.00	4.00		●
TLDOA2450	245.00	264.50	32.00	241.00	268.90	267.90	255.00	14.50	17.00	2.80	5.00	3.00	●	
TLDOB2500	250.00	276.00	44.00	247.00	284.60	283.60	266.00	20.50	24.00	3.00	4.00	4.00	●	
TLDOA2500	250.00	276.00	41.00	247.00	284.60	283.60	266.00	20.50	22.50	3.00	4.00	4.00		●
TLDOA2520	252.00	280.00	38.00	248.00	285.50	284.50	265.00	18.00	20.00	3.10	6.50	3.00	●	
TLDOA2650	265.00	292.80	38.00	261.00	297.80	297.00	280.00	18.00	20.50	3.70	6.30	6.30	●	
TLDOB2650	265.00	292.80	46.00	261.00	297.80	297.00	280.00	18.40	24.10	3.70	6.30	6.30	●	
TLDOA2650	265.00	293.00	38.00	262.00	298.00	297.00	280.00	19.00	21.00	3.00	6.40	4.00		●
TLDOA2750	275.00	303.00	38.00	271.00	308.00	307.00	290.00	18.00	20.50	3.10	6.50	3.00	●	
TLDOA2750	275.00	303.00	38.00	271.00	308.00	307.00	290.00	18.00	20.50	3.10	6.4	4.00		●
TLDOA2829	282.90	310.80	38.00	280.00	316.30	315.40	298.40	18.40	20.30	3.70	6.30	6.30	●	
TLDOA3000	300.00	325.00	38.00	296.00	335.50	334.50	318.00	17.50	20.50	3.10	6.50	3.00	●	
TLDOB3000	300.00	328.00	40.00	296.00	333.00	332.00	315.00	18.50	21.00	3.00	4.00	4.00	●	
TLDOB3000	300.00	328.00	39.00	297.00	333.00	332.00	315.00	19.50	22.00	3.00	4.00	4.00		●
TLDOA3010	301.00	328.00	38.00	297.00	333.00	332.10	315.10	18.40	20.30	3.70	6.30	6.30	●	
TLDOA3190	319.00	346.50	46.00	315.00	351.60	350.70	333.70	18.40	24.10	3.70	6.30	6.30	●	
TLDOA3185	318.50	346.50	38.00	315.50	351.60	350.70	333.70	18.40	20.30	3.70	6.30	6.30	●	
TLDOA3180	318.50	341.00	38.00	315.00	351.60	350.70	335.00	19.00	21.50	3.00	6.40	4.00		●
TLDOA3180	318.00	341.40	38.00	315.00	351.50	350.50	334.00	18.00	20.50	3.10	6.50	3.00	●	
TLDOA3395	339.50	369.00	40.00	335.00	374.80	373.80	358.00	19.00	21.50	3.00	4.00	4.00	●	
TLDOA3400	340.00	369.00	40.00	337.00	374.80	373.80	358.00	19.00	21.50	3.00	4.00	3.00	●	
TLDOA3400	340.00	368.00	38.00	333.00	375.70	374.80	358.00	19.60	22.10	3.10	4.00	2.00		●
TLDOA3500	350.00	375.00	38.00	345.00	385.50	384.50	368.00	17.50	20.50	3.10	6.50	3.00	●	
TLDOD3665	366.50	394.50	48.00	363.50	399.50	398.60	381.70	18.40	24.10	3.70	6.30	6.30	●	
TLDOA3665	366.50	394.50	37.00	363.00	399.50	398.60	382.00	18.50	21.00	3.00	6.40	4.00		●
TLDOB3665	366.50	391.00	38.00	363.00	399.50	398.50	381.80	18.50	21.00	3.00	4.00	4.00		●
TLDOC3665	366.50	394.40	38.00	363.50	399.50	398.60	381.70	18.40	20.30	3.70	6.30	6.30	●	
TLDOA3700	370.00	398.00	38.00	365.00	403.50	402.60	385.00	17.50	20.50	3.00	6.50	3.00	●	

Seat Ramp Angle is 10°, except for a few exceptions shown in the notes at the bottom of the page.

1) 15° 2) 12° 3) 12°30' 4) 9°30'

All sizes in Bearing Steel (BS) could also be requested in Cast Iron (CI)

TSS Part No.	D_i	D_a	L	$d_{max.}$	D	D_1	D_3	L_1	$L_{2min.}$	L_4	r	S	BS	CI
TLDOA3805	380.50	405.00	40.00	375.00	412.20	410.50	395.00	17.00	22.00	3.00	4.00	4.00	●	
TLDOA3850	385.00	413.00	46.00	381.00	424.50	423.30	402.00	22.00	30.00	3.50	6.00	8.00	●	
TLDOA3870	387.00	415.00	38.00	382.00	420.30	419.30	402.00	17.50	20.50	3.00	6.50	3.00	●	
TLDOA3870	387.00	415.00	38.00	384.00	419.50	418.50	400.00	18.00	20.50	3.00	4.00	3.00		●
TLDOA4285	428.50	454.00	37.00	425.00	462.30	461.30	444.60	18.50	21.00	3.00	4.00	4.00	●	
TLDOA4290	429.00	457.00	38.00	426.00	463.50	462.50	444.00	18.00	20.50	3.00	4.00	3.00		●
TLDOA4292	429.20	457.20	38.00	426.20	462.30	461.40	444.40	18.40	20.30	3.70	6.30	6.30	●	
TLDOB4292	429.20	457.20	38.00	426.20	463.50	462.50	444.00	18.00	20.50	3.10	6.50	3.00	●	
TLDOA4500	450.00	480.00	50.00	445.00	492.20	490.20	470.00	23.50	25.50	4.00	6.00	3.00	●	
TLDOA4700	470.00	500.00	50.00	465.00	512.20	510.20	490.00	23.50	25.50	4.00	6.00	3.00	●	
TLDOA5054	505.40	533.40	44.00	502.40	538.50	537.60	520.60	21.30	26.20	3.70	6.30	6.30	●	
TLDOA5300	530.00	560.00	50.00	524.00	572.20	570.20	545.00	23.50	25.50	4.00	6.00	3.00	●	
TLDOA5800	580.00	608.00	43.60	575.50	613.00	611.00	596.00	19.70	21.70	4.00	6.50	6.00	●	
TLDOA5910	591.00	623.00	50.00	585.00	635.20	632.10	613.00	23.50	25.50	4.00	6.00	5.20	●	
TLDOA6670	667.00	700.00	44.00	660.00	705.60	704.60	687.60	18.40	23.40	3.70	6.30	6.30	●	
TLDOA7100	710.00	750.00	50.00	700.00	762.20	760.20	740.00	23.50	25.50	4.00	6.00	3.00	●	
TLDOA8300	830.00	886.00	80.00	815.00	891.60	890.60	860.00	34.50	39.50	4.40	10.00	17.00	●	

Seat Ramp Angle is 10°, except for a few exceptions shown in the notes at the bottom of the page.
1) 15° 2) 12° 3) 12°30' 4) 9°30'
All sizes in Bearing Steel (BS) could also be requested in Cast Iron (CI)

ORDERING EXAMPLE

Mechanical Face Seal Type DO

Inside diameter:	Di = 125.0 mm
Materials:	Seal Rings of Bearing Steel (1.3505) O-Rings of NBR

TSS Article No. **TLDOA 1250 - 2CP00**
TSS Part No.
Inside Diameter x 10
Quality Index (Standard)
Material No.

Mechanical Face Seal Type DO

Inside diameter:	Di = 240.0 mm
Materials:	Cast Iron O-Rings of NBR

TSS Article No. **TLDOA 2400 - 2FP00**
TSS Part No.
Inside Diameter x 10
Quality Index (Standard)
Material No.

Installation Recommendations for Type DF Bearing Steel

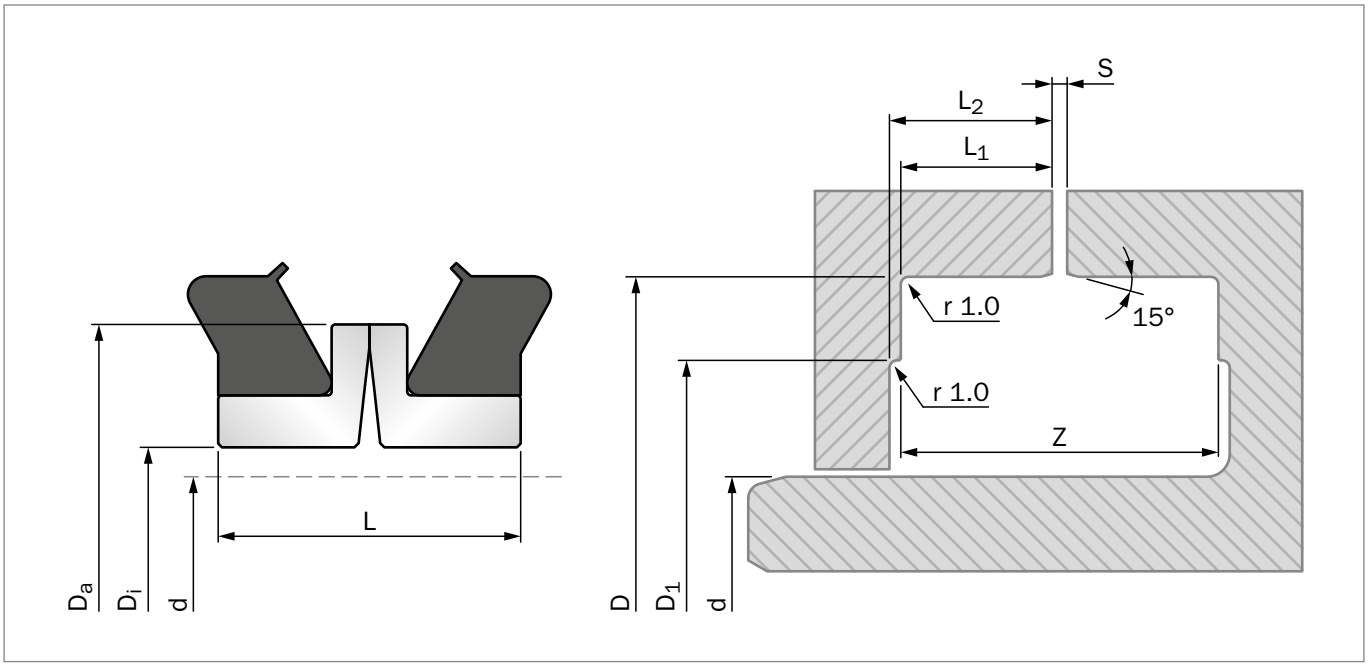

Figure 16: Installation Drawing

Table 4: Standard Installation Dimensions / TSS Part Number

TSS Part No.	D_i	D_a	L	$d_{max.}$	D	D_1	L_1	L_2	S	Z	BS	CI
TLDFA0420	42.0	59.0	20.0	38.0	65.0	53.0	10.0	10.5	3.0	23.0	●	
TLDFA0470	47.0	62.0	20.0	44.0	70.0	58.0	10.0	11.0	3.0	23.0	●	
TLDFA0505	50.5	65.0	19.0	46.0	76.2	63.0	10.0	11.0	2.5	22.5	●	
TLDFA0540	54.0	73.0	22.0	50.0	80.0	67.0	11.5	12.0	3.0	26.0	●	
TLDFA0585	58.5	73.0	19.0	54.0	82.5	65.0	10.0	11.0	3.0	23.0	●	
TLDFA0586	58.6	80.0	19.6	57.0	84.0	71.0	9.0	9.5	3.0	21.0	●	
TLDFA0635	63.5	81.0	19.0	59.5	87.8	71.0	9.0	9.5	3.0	21.0	●	
TLDFA0670	67.0	86.2	20.0	64.0	95.4	82.0	10.0	11.0	3.0	23.0	●	
TLDFB0670	67.0	87.0	25.0	64.0	95.0	81.0	12.5	13.0	4.0	29.0	●	
TLDFC0670	67.0	91.7	20.0	64.0	95.4	82.0	10.0	11.0	3.0	23.0	●	
TLDFA0680	68.0	86.2	20.0	64.0	95.6	82.0	10.0	11.0	3.5	23.5	●	
TLDFA0738	73.8	92.8	20.0	70.0	102.2	88.0	10.0	11.0	3.0	23.0	●	
TLDFA0740	74.0	99.0	20.0	70.0	102.2	88.0	10.0	11.0	3.0	23.0	●	
TLDFA0770	77.0	97.0	25.0	74.0	105.0	87.0	12.5	13.5	4.0	29.0	●	
TLDFA0817	81.7	101.5	20.0	70.0	110.2	96.0	10.0	11.0	3.0	23.0	●	
TLDFA0825	82.5	100.0	22.0	78.0	114.3	97.0	11.0	12.0	3.5	25.5	●	
TLDFA0875	87.5	109.0	17.5	83.0	113.0	100.0	8.5	9.5	3.0	20.0	●	
TLDFB0875	87.5	111.5	19.0	85.0	115.8	102.0	10.0	11.0	3.0	23.0	●	
TLDFA0920	92.0	113.0	24.0	88.0	125.8	109.0	12.5	13.0	3.0	28.0	●	
TLDFA0940	94.0	112.5	24.0	90.0	125.8	109.0	12.5	13.0	3.0	28.0	●	
TLDFA0990	99.0	120.0	17.5	95.0	124.0	110.0	8.5	9.5	3.0	20.0	●	

TSS Part No.	D_i	D_a	L	$d_{max.}$	D	D_1	L_1	L_2	S	Z	BS	CI
TLDFB0990	99.0	123.0	19.0	95.0	127.3	113.0	10.0	11.0	3.0	23.0	●	
TLDFA1040	104.0	126.0	24.0	100.0	135.0	114.0	12.0	13.0	4.0	28.0	●	
TLDFB1050	105.0	124.0	24.4	101.0	134.9	125.0	13.3	14.5	3.0	29.6	●	
TLDFB1140	114.0	138.0	26.0	110.0	148.0	126.0	12.0	13.0	4.0	28.0	●	
TLDFA1180	118.0	142.0	29.0	114.0	152.4	131.4	16.3	16.3	2.0	34.6		●
TLDFA1240	124.0	144.0	32.0	119.0	162.5	141.5	18.5	20.5	3.0	40.0	●	
TLDFA1330	133.0	156.0	28.0	128.0	171.5	151.0	13.0	14.0	6.5	32.5	●	
TLDFA1485	148.5	168.0	32.4	143.0	184.1	164.0	16.5	17.5	5.0	38.0	●	
TLDFA1500	150.0	175.0	30.0	145.0	190.0	170.0	15.0	15.5	5.0	35.0	●	
TLDFA1540	154.0	180.0	36.0	149.0	194.0	174.0	18.4	20.0	4.5	41.3	●	
TLDFA1580	158.0	180.0	18.0	153.0	190.0	174.0	8.0	10.0	6.0	22.0	●	
TLDFA1690	169.0	195.0	33.0	164.0	206.2	191.5	15.1	18.4	5.0	35.2	●	
TLDFA1777	177.7	207.0	29.0	173.0	218.9	197.0	16.6	17.5	3.0	36.2	●	
TLDFA1795	179.5	207.0	29.0	173.0	218.9	197.0	16.6	17.5	3.0	36.2	●	
TLDFA1930	193.0	214.3	31.0	187.0	238.9	215.0	19.4	20.4	3.0	41.8	●	
TLDFA1940	194.0	214.5	31.0	188.0	238.8	214.0	20.1	21.0	3.0	43.2	●	
TLDFA1980	198.0	224.0	35.0	195.0	245.0	223.0	17.0	17.5	6.0	40.0	●	
TLDFA2280	228.0	260.5	41.0	221.0	277.1	247.5	23.5	24.5	4.0	51.0	●	
TLDFA2330	233.0	259.0	35.0	229.0	280.0	250.0	17.0	18.0	6.0	40.0	●	
TLDFA2415	241.5	273.5	36.0	235.0	279.4	260.6	17.5	20.0	2.0	37.0	●	
TLDFB2415	241.5	273.5	33.0	235.0	279.4	260.6	17.5	20.0	2.0	36.5	●	
TLDFA2750	275.0	303.0	36.0	270.0	309.4	290.0	17.5	20.0	2.0	37.0	●	
TLDFA2750	275.0	303.0	36.0	270.0	309.4	290.0	17.5	20.0	2.0	37.0		●
TLDFA2830	283.0	305.0	42.0	278.0	329.4	307.0	18.5	22.1	3.0	40.0	●	
TLDFA3200	320.0	352.5	40.0	312.0	365.1	343.0	20.0	21.5	2.0	42.0	●	
TLDFA3550	355.5	392.0	39.6	345.0	401.7	380.0	23.0	24.0	1.8	47.8	●	
TLDFA4420	442.0	470.0	41.0	435.0	488.7	467.0	18.4	22.0	2.5	39.3	●	
TLDFA4920	492.0	530.0	43.0	480.0	546.1	532.0	19.9	24.4	2.0	41.8	●	

All sizes in Bearing Steel (BS) could also be requested in Cast Iron (CI).

ORDERING EXAMPLE

Mechanical Face Seal Type DF in Bearing Steel

Inside diameter:	Di = 150 mm
Materials:	Sealing Ring of Bearing Steel
	Square Ring of NBR

TSS Article No. **TLDFA 1500 - 2CP00**

TSS Part No.

Inside Diameter x 10

Quality Index (Standard)

Material No.

Trelleborg is a world leader in engineered polymer solutions that protect essential applications in demanding environments. Its innovative solutions accelerate performance for customers in a sustainable way.

Trelleborg Sealing Solutions combines deep materials and applications expertise with close customer collaboration to fulfil our mission as a leading provider of precision seals, bearings and custom polymer components. We focus on meeting the most demanding needs of aerospace, food and beverage, semiconductor and general industrial customers.

WWW.TRELLEBORG.COM/SEALS

facebook.com/TrelleborgSealingSolutions
x.com/TrelleborgSeals
youtube.com/TrelleborgSeals
linkedin.com/company/trelleborg-sealing-solutions
instagram.com/trelleborgsealingsolutions

If you'd like to talk to Trelleborg Sealing Solutions, find your local contact at: www.trelleborg.com/seals/worldwide

Copyright © 2026 Trelleborg AB (publ). All rights reserved. Information and related materials are subject to change without notice.

Version no. 99003055GBGA0426